ECE408/CS483/CSE408 Fall 2024

Applied Parallel Programming

Lecture 21: Alternatives to CUDA

© David Kirk/NVIDIA and Wen-mei W. Hwu, 2007-2018
ECE408/CS483/CSE408, ECE 498AL, University of Illinois, Urbana-Champaign

Course Reminders

- Lab 8 is due this week
  - This is our last lab
- PM3 is due on Friday, December 6th
  - This is a much more involved PM, start early, do not wait to submit until last minute!
  - Competition description will be out too, but first you need to finish PM3.
- MT2 is coming on December 10th, see Canvas for details
  - If you have a conflict with the exam time, please email me by Monday, December 2nd.

© David Kirk/NVIDIA and Wen-mei W. Hwu, 2007-2018
ECE408/CS483/CSE408, ECE 498AL, University of Illinois, Urbana-Champaign

Upcoming Guest Lectures

- 11/14/24, **in-person in-class**
- Guest lecture by **Dr. Vikram Mailthody**, NVIDIA
  - *Understanding modern AI datacenters*
  - Dr. Mailthody is a Senior Research Scientist at NVIDIA Research, specializing in solving fundamental systems-level challenges in emerging data center workloads and designing scalable GPU memory and storage solutions for data centers. He earned his PhD from the University of Illinois Urbana-Champaign, where he was supervised by Prof. Wen-mei Hwu.

© David Kirk/NVIDIA and Wen-mei W. Hwu, 2007-2018
ECE408/CS483/CSE408, ECE 498AL, University of Illinois, Urbana-Champaign

Upcoming Guest Lectures

- 11/19/24, **in-person in-class**
- Guest lecture by **Prof. Sanjay Patel,** NVIDIA
  - *Tensor Processing APIs*
  - Dr. Patel is a Distinguished Senior Compute Platforms Architect / DGX Cloud at NVIDIA. Led the team that developed the world's first physics co-processor and PhysX framework at Ageia Technologies. Ageia was acquired by Nvidia in 2008. Prior to joining NVIDIA in 22024, Dr. Patel was a Professor of ECE and CS at Illinois. Dr. Patel's research has focused on computer architecture, and massively parallel chip design, with a focus on emerging use cases.

© David Kirk/NVIDIA and Wen-mei W. Hwu, 2007-2018
ECE408/CS483/CSE408, ECE 498AL, University of Illinois, Urbana-Champaign

Upcoming Guest Lectures

- 11/21/24, **recorded**
- Guest lecture by **Jeff Larkin,** NVIDIA
  - *No More Porting! Programming GPUs with C++, Fortran, and Python*
  - Mr. Larkin is a Principal HPC Application Architect in NVIDIA's HPC Software team. He was previously a member of NVIDIA's Developer Technology group, specializing in performance analysis and optimization of high-performance computing applications. He is also the chair of the OpenACC technical committee and has worked in both the OpenACC and OpenMP standards bodies.

© David Kirk/NVIDIA and Wen-mei W. Hwu, 2007-2018
ECE408/CS483/CSE408, ECE 498AL, University of Illinois, Urbana-Champaign

Accelerated Computing is no longer a question

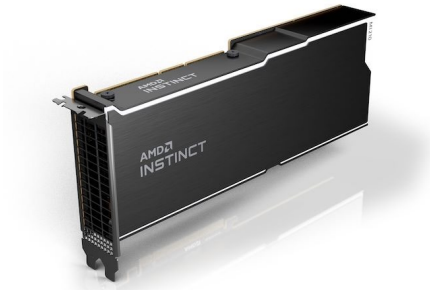

GPU vendors include:
Nvidia
AMD
Intel
Samsung
Apple
Qualcomm
ARM
etc….

© David Kirk/NVIDIA and Wen-mei W. Hwu, 2007-2018
ECE408/CS483/CSE408, ECE 498AL, University of Illinois, Urbana-Champaign

CUDA is just one model for Compute Acceleration

OpenGL (1992)

DirectX (1995)

GPGPU (2002)

CUDA (2007)

OpenCL (2008)

OpenACC (2012)

C++AMP (2013)

RenderScript (2013)

OpenMP (2016)

Metal (2014)

SYCL (2014)

Vulkan (2016)

ROCm HIP (2016)

Existing frameworks such as MPI, TBB, OpenCV adapted to provide support.
New frameworks such as Caffe, TensorFlow, R, PyCUDA natively support acceleration.

© David Kirk/NVIDIA and Wen-mei W. Hwu, 2007-2018
ECE408/CS483/CSE408, ECE 498AL, University of Illinois, Urbana-Champaign

OpenCL, HIP, OpenACC, MPI

- OpenCL: An Open Standard Acceleration API
- Heterogeneous-Computing Interface for Portability (HIP)
- OpenACC: A “Low-Code” Acceleration API
- MPI: A Large Scale, Multi-Node Parallel API

© David Kirk/NVIDIA and Wen-mei W. Hwu, 2007-2018
ECE408/CS483/CSE408, ECE 498AL, University of Illinois, Urbana-Champaign

Common Traits for Acceleration APIs

- HARDWARE
  - Hierarchy of lightweight cores
  - Local scratchpad memories
  - Lack of HW coherence
  - Slow global atomics
  - Threading
- SOFTWARE
  - Kernel oriented acceleration
  - Device memory vs. Host memory
  - Software managed memory
  - Grids, Blocks, Threads
  - Bulk Synchronous Parallelism

© David Kirk/NVIDIA and Wen-mei W. Hwu, 2007-2018
ECE408/CS483/CSE408, ECE 498AL, University of Illinois, Urbana-Champaign

OpenCL

- Framework for CPUs, GPUs, DSPs, FPGAs, etc. (not just NVIDIA GPUs)
- Initially developed by Apple with support from AMD, IBM, Qualcomm, Intel, and Nvidia. OpenCL 1.0 launched in 2008.
- OpenCL 2.2 launched in May 2017
- Apple announces dropping of OpenCL in 2018

© David Kirk/NVIDIA and Wen-mei W. Hwu, 2007-2018
ECE408/CS483/CSE408, ECE 498AL, University of Illinois, Urbana-Champaign

OpenCL Memory Model

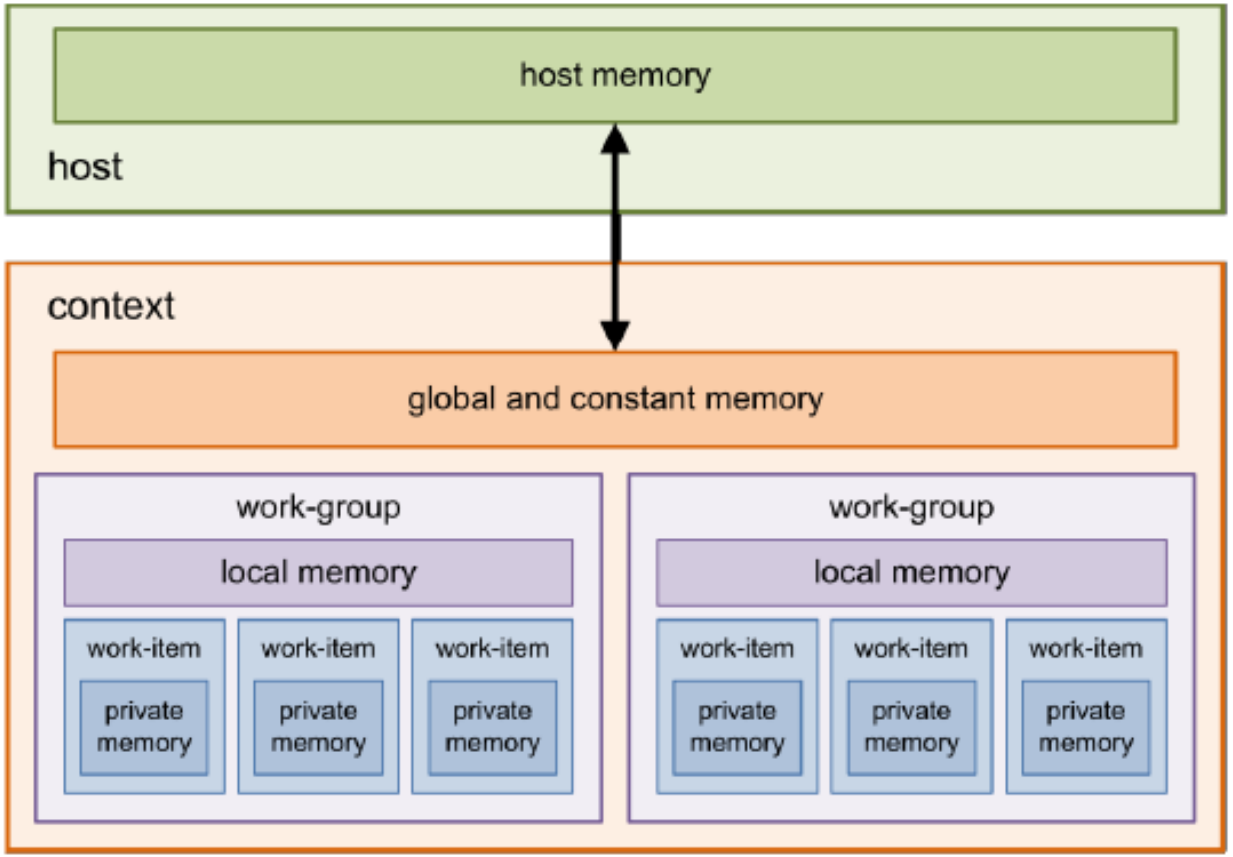

© David Kirk/NVIDIA and Wen-mei W. Hwu, 2007-2018
ECE408/CS483/CSE408, ECE 498AL, University of Illinois, Urbana-Champaign

OpenCL MatMult

- Notice similarity to CUDA
- WorkGroup similar to Block
- WorkItem similar to Thread
- __local similar to __shared

```
// Tiled and coalesced version
__kernel void myGEMM2(int M, int N, int K, __global float*A, __global float*B, __global float*C) {

  // Thread identifiers
  const int row = get_local_id(0); // Local row ID (max: TS)
  const int col = get_local_id(1); // Local col ID (max: TS)
  const int globalRow = TS*get_group_id(0) + row; // Row ID of C (0..M)
  const int globalCol = TS*get_group_id(1) + col; // Col ID of C (0..N)

   // Local memory to fit a tile of TS*TS elements of A and B
   __local float Asub[TS][TS];
   __local float Bsub[TS][TS];

   // Initialise the accumulation register
   float acc = 0.0f;
   // Loop over all tiles
   const int numTiles = K/TS;
   for (int t=0; t<numTiles; t++) {

      // Load one tile of A and B into local memory
      const int tiledRow = TS*t + row;
      const int tiledCol = TS*t + col;
      Asub[col][row] = A[tiledCol*M + globalRow];
      Bsub[col][row] = B[globalCol*K + tiledRow];

      // Synchronise to make sure the tile is loaded
      barrier(CLK_LOCAL_MEM_FENCE);

      // Perform the computation for a single tile
      for (int k=0; k<TS; k++)
         acc += Asub[k][row] * Bsub[col][k];

      // Synchronise before loading the next tile
      barrier(CLK_LOCAL_MEM_FENCE);
   }

   // Store the final result in C
   C[globalCol*M + globalRow] = acc;
}
```

© David Kirk/NVIDIA and Wen-mei W. Hwu, 20
ECE408/CS483/CSE408, ECE 498AL, University of Illinois, Urbana-Champaign

HIP

- Heterogeneous-Computing Interface for Portability (HIP)
  - C++ dialect designed to ease conversion of CUDA applications to portable C++ code.
  - Provides a C-style API and a C++ kernel language.
  - The C++ interface can use templates and classes across the host/kernel boundary.
- HIP code can run on AMD hardware (through the HCC compiler) or NVIDIA hardware (through the NVCC compiler).
- The HIPify tool automates much of the conversion work by performing a source-to-source transformation from CUDA to HIP.

© David Kirk/NVIDIA and Wen-mei W. Hwu, 2007-2018
ECE408/CS483/CSE408, ECE 498AL, University of Illinois, Urbana-Champaign

vectorAdd with HIP

```
__global__ void vecAdd(double *a, double *b, double *c, int n) {
    int id = blockIdx.x*blockDim.x+threadIdx.x;
    if (id < n) c[id] = a[id] + b[id];
}
...
    hipMalloc(&d_a, nbytes);
    hipMalloc(&d_b, nbytes);
    hipMalloc(&d_c, nbytes);

    hipMemcpy(d_a, h_a, bytes, hipMemcpyHostToDevice);
    hipMemcpy(d_b, h_b, bytes, hipMemcpyHostToDevice);

    blockSize = 1024;
    gridSize = (int)ceil((float)n/blockSize);

    hipLaunchKernelGGL(vecAdd, dim3(gridSize), dim3(blockSize), 0, 0, d_a, d_b, d_c, n);
    hipDeviceSynchronize( );

    hipMemcpy(h_c, d_c, bytes, hipMemcpyDeviceToHost);
...
```

© David Kirk/NVIDIA and Wen-mei W. Hwu, 2007-2018
ECE408/CS483/CSE408, ECE 498AL, University of Illinois, Urbana-Champaign

OpenACC

The OpenACC Application Programming Interface (API) provides a set of

- compiler directives (pragmas),
- library routines, and
- environment variables

that enable

- FORTRAN, C and C++ programs
- to execute on accelerator devices
- including GPUs and CPUs.

© David Kirk/NVIDIA and Wen-mei W. Hwu, 2007-2018
ECE408/CS483/CSE408, ECE 498AL, University of Illinois, Urbana-Champaign

Pragmas Provide Extra Information

In C and C++,

- the `#pragma` directive
- provides the compiler with
- information not specified in the language.

For OpenACC, they look like this:

#pragma acc [the information goes here]

© David Kirk/NVIDIA and Wen-mei W. Hwu, 2007-2018
ECE408/CS483/CSE408, ECE 498AL, University of Illinois, Urbana-Champaign

The OpenACC Abstract Machine Model

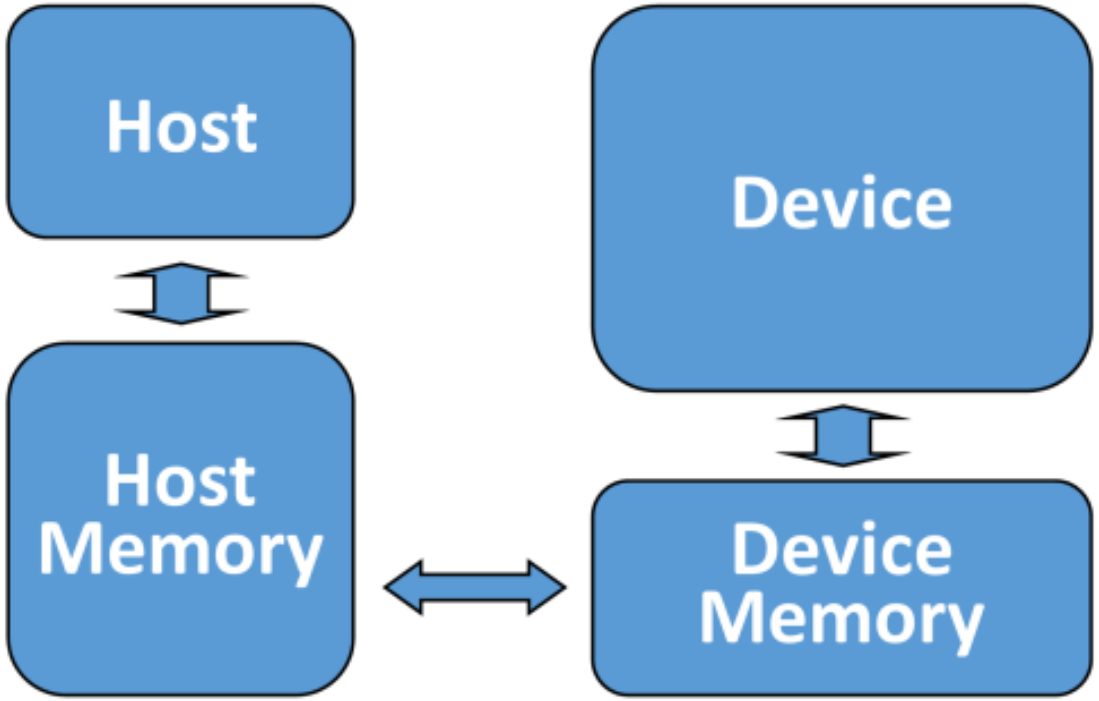

© David Kirk/NVIDIA and Wen-mei W. Hwu, 2007-2018
ECE408/CS483/CSE408, ECE 498AL, University of Illinois, Urbana-Champaign

The OpenACC Directives

Manage Data Movement

Initiate Parallel Execution

Optimize Loop Mappings

```
#pragma acc data copyin(x,y) copyout(z)
{
    ...
    #pragma acc parallel
    {
    #pragma acc loop gang vector
        for (i = 0; i < n; ++i) {
            z[i] = x[i] + y[i];
            ...
        }
    }
    ...
}
```

© David Kirk/NVIDIA and Wen-mei W. Hwu, 2007-2018
ECE408/CS483/CSE408, ECE 498AL, University of Illinois, Urbana-Champaign

Simple Matrix-Matrix Multiplication in OpenACC

```
void computeAcc(float *P, const float *M, const float *N, int Mh, int Mw, int Nw) {
 #pragma acc parallel loop copyin(M[0:Mh*Mw]) copyin(N[0:Nw*Mw]) copyout(P[0:Mh*Nw])
 for (int i=0; i<Mh; i++) {
     #pragma acc loop
     for (int j=0; j<Nw; j++) {
         float sum = 0;
         for (int k=0; k<Mw; k++) {
             float a = M[i*Mw+k];
             float b = N[k*Nw+j];
             sum += a*b;
         }
         P[i*Nw+j] = sum;
     }
  }
}
```

© David Kirk/NVIDIA and Wen-mei W. Hwu, 2007-2018
ECE408/CS483/CSE408, ECE 498AL, University of Illinois, Urbana-Champaign

Add Pragmas to Sequential Code

The **code** is

- **identical to** the **sequential** version
- **except for** the two **pragmas**
- at lines 2 and 4.

OpenACC uses the compiler directive mechanism to extend the base language.

© David Kirk/NVIDIA and Wen-mei W. Hwu, 2007-2018
ECE408/CS483/CSE408, ECE 498AL, University of Illinois, Urbana-Champaign

Simple Matrix-Matrix Multiplication in OpenACC

```
1  void computeAcc(float *P, const float *M, const float *N, int Mh, int Mw, int Nw) {
2   #pragma acc parallel loop copyin(M[0:Mh*Mw]) copyin(N[0:Nw*Mw]) copyout(P[0:Mh*Nw])
3   for (int i=0; i<Mh; i++) {
4       #pragma acc loop
5       for (int j=0; j<Nw; j++) {
6           float sum = 0;
7           for (int k=0; k<Mw; k++) {
8               float a = M[i*Mw+k];
9               float b = N[k*Nw+j];
10               sum += a*b;
11          }
12          P[i*Nw+j] = sum;
13      }
14   }
15 }
```

tells compiler

- to execute ‘i’ loop
- (lines 3 through 14)
- in parallel on accelerator.

copyin/copyout specify

- how matrix data
- should be transferred between memories.

© David Kirk/NVIDIA and Wen-mei W. Hwu, 2007-2018
ECE408/CS483/CSE408, ECE 498AL, University of Illinois, Urbana-Champaign

Simple Matrix-Matrix Multiplication in OpenACC

```
1  void computeAcc(float *P, const float *M, const float *N, int Mh, int Mw, int Nw) {
2   #pragma acc parallel loop copyin(M[0:Mh*Mw]) copyin(N[0:Nw*Mw]) copyout(P[0:Mh*Nw])
3   for (int i=0; i<Mh; i++) {
4       #pragma acc loop
5       for (int j=0; j<Nw; j++) {
6           float sum = 0;
7           for (int k=0; k<Mw; k++) {
8               float a = M[i*Mw+k];
9               float b = N[k*Nw+j];
10               sum += a*b;
11          }
12          P[i*Nw+j] = sum;
13      }
14   }
15 }
```

tells compiler

- to map ‘j’ loop
- (lines 5 through 13)
- to second level
- of parallelism on accelerator.

© David Kirk/NVIDIA and Wen-mei W. Hwu, 2007-2018
ECE408/CS483/CSE408, ECE 498AL, University of Illinois, Urbana-Champaign

Motivating Goal: One Version of Code

OpenACC programmers

- can often start with a sequential version,
- then annotate their program with directives,
- leaving most kernel details and data transfers
- to the OpenACC compiler.

OpenACC code can be compiled by non-OpenACC compilers by ignoring the pragmas.

© David Kirk/NVIDIA and Wen-mei W. Hwu, 2007-2018
ECE408/CS483/CSE408, ECE 498AL, University of Illinois, Urbana-Champaign

Reality is More Complicated

Reality check:

- can be **difficult to write code**
- that works **correctly and well**
- **with and without pragmas**.

Some OpenACC programs

- behave differently or even incorrectly
- if pragmas are ignored.

© David Kirk/NVIDIA and Wen-mei W. Hwu, 2007-2018
ECE408/CS483/CSE408, ECE 498AL, University of Illinois, Urbana-Champaign

Pitfall: Strong Dependence on Compiler

Some OpenACC pragmas

- are hints to the OpenACC compiler,
- which may or may not be able to act accordingly

Performance depends heavily

- **on** the **quality of** the **compiler**
- (more so than with CUDA or OpenCL).

© David Kirk/NVIDIA and Wen-mei W. Hwu, 2007-2018
ECE408/CS483/CSE408, ECE 498AL, University of Illinois, Urbana-Champaign

OpenACC Device Model

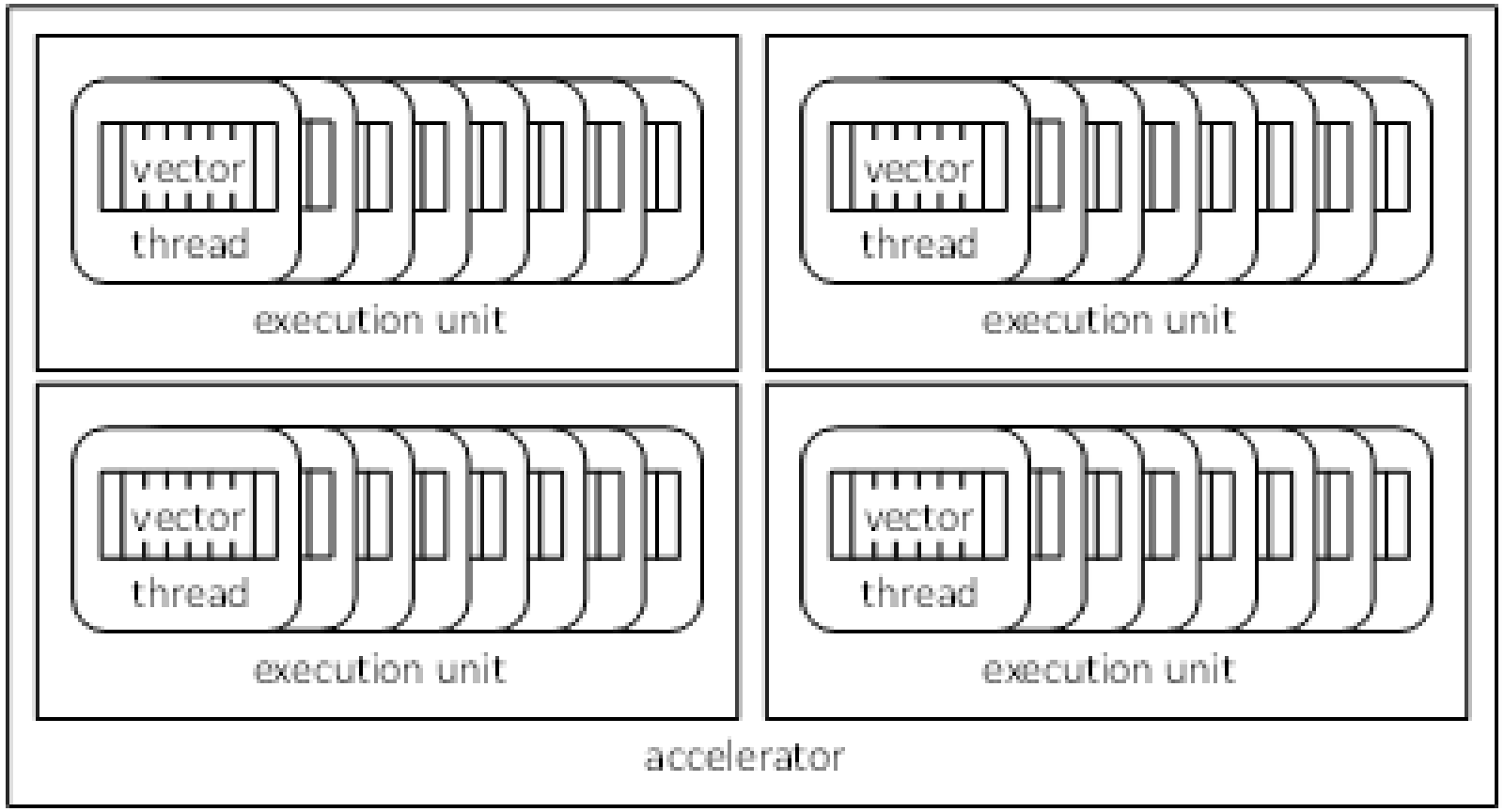

Currently OpenACC does not allow user-specified synchronization across threads.

© David Kirk/NVIDIA and Wen-mei W. Hwu, 2007-2018
ECE408/CS483/CSE408, ECE 498AL, University of Illinois, Urbana-Champaign

OpenACC Execution Model (Terminology: Gangs and Works)

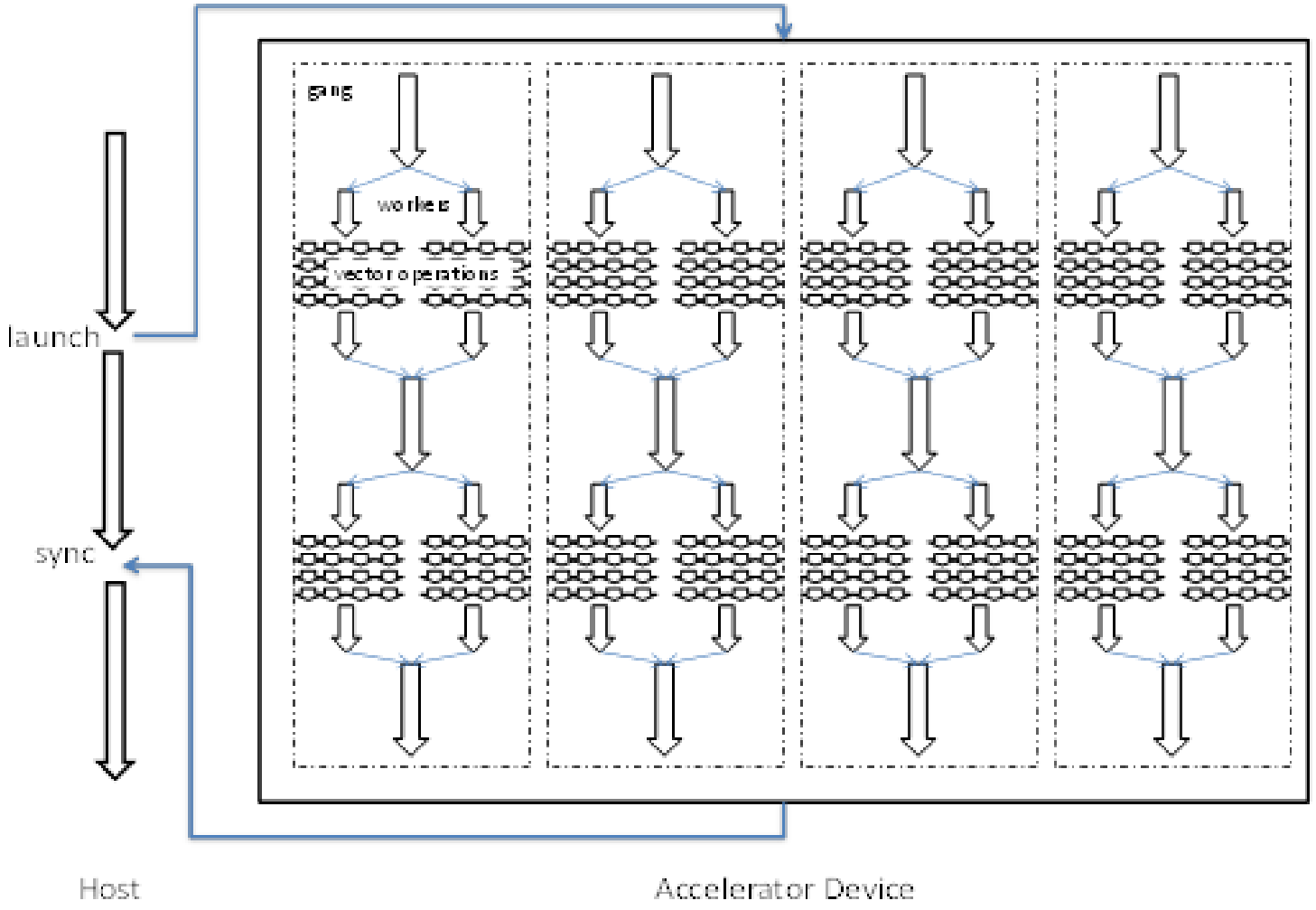

© David Kirk/NVIDIA and Wen-mei W. Hwu, 2007-2018
ECE408/CS483/CSE408, ECE 498AL, University of Illinois, Urbana-Champaign

Parallel vs. Loop Constructs

```
#pragma acc parallel loop copyin(M[0:Mh*Mw]) copyin(N[0:Nw*Mw]) copyout(P[0:Mh*Nw])
for (int i=0; i<Mh; i++) {
…
}
```

is equivalent to:

```
#pragma acc parallel copyin(M[0:Mh*Mw]) copyin(N[0:Nw*Mw]) copyout(P[0:Mh*Nw])
{
    #pragma acc loop
    for (int i=0; i<Mh; i++) {
        …
    }
}
```

(a parallel region that consists of just a loop)

© David Kirk/NVIDIA and Wen-mei W. Hwu, 2007-2018
ECE408/CS483/CSE408, ECE 498AL, University of Illinois, Urbana-Champaign

Parallel Construct

- A parallel construct is executed on an accelerator
- One can specify the number of gangs and number of works in each gang
- Programmer's directive

```
#pragma acc parallel copyout(a) num_gangs(1024) num_workers(32)
{
        a = 23;
}
```

1024*32 workers will be created. a=23 will be executed redundantly by all 1024 gang leads

© David Kirk/NVIDIA and Wen-mei W. Hwu, 2007-2018
ECE408/CS483/CSE408, ECE 498AL, University of Illinois, Urbana-Champaign

What does each "Gang Loop" do?

```
#pragma acc parallel num_gangs(1024)
{
    for (int i=0; i<2048; i++) {
        …
    }
}
```

The for-loop will be redundantly executed by 1024 gangs

```
#pragma acc parallel num_gangs(1024)
{
#pragma acc loop gang
    for (int i=0; i<2048; i++) {
        …
    }
}
```

The 2048 iterations of the for-loop will be divided among 1024 gangs for execution

© David Kirk/NVIDIA and Wen-mei W. Hwu, 2007-2018
ECE408/CS483/CSE408, ECE 498AL, University of Illinois, Urbana-Champaign

Worker Loop

```
#pragma acc parallel num_gangs(1024) num_workers(32)
{
    #pragma acc loop gang
    for (int i=0; i<2048; i++) {
        #pragma acc loop worker
        for (int j=0; j<512; j++) {
            foo(i,j);
        }
    }
}
```

1024*32=32K workers will be created, each executing 1M/32K = 32 instance of foo()

© David Kirk/NVIDIA and Wen-mei W. Hwu, 2007-2018
ECE408/CS483/CSE408, ECE 498AL, University of Illinois, Urbana-Champaign

A More Complex Example

```
#pragma acc parallel num_gangs(32)
{
    Statement 1; Statement 2;
    #pragma acc loop gang
    for (int i=0; i<n; i++) {
        Statement 3; Statement 4;
    }
    Statement 5;  Statement 6;
    #pragma acc loop gang
    for (int i=0; i<m; i++) {
        Statement 7;  Statement 8;
    }
    Statement 9;
    if (condition)
      Statement 10;
}
```

- Statements 1 and 2 are redundantly executed by 32 gangs
- The n for-loop iterations are distributed to 32 gangs

© David Kirk/NVIDIA and Wen-mei W. Hwu, 2007-2018
ECE408/CS483/CSE408, ECE 498AL, University of Illinois, Urbana-Champaign

Kernel Regions

```
#pragma acc kernels
{
    #pragma acc loop num_gangs(1024)
    for (int i=0; i<2048; i++) {
        a[i] = b[i];
    }
    #pragma acc loop num_gangs(512)
    for (int j=0; j<2048; j++) {
        c[j] = a[j]*2;
    }
    for (int k=0; k<2048; k++) {
        d[k] = c[k];
    }
}
```

- Kernel constructs are descriptive of programmer intentions (suggestions)

© David Kirk/NVIDIA and Wen-mei W. Hwu, 2007-2018
ECE408/CS483/CSE408, ECE 498AL, University of Illinois, Urbana-Champaign

Reduction

```
#pragma acc parallel loop
 reduction(+:sum)
  for(int i=0;i<n;i++) {
    sum +=
      xcoefs[i]*ycoefs[i];
  }
```

- Because each iteration of the loop adds to the variable sum, we must declare a reduction.
- A parallel reduction may return a slightly different result than a sequential addition due to floating point limitations.

© David Kirk/NVIDIA and Wen-mei W. Hwu, 2007-2018
ECE408/CS483/CSE408, ECE 498AL, University of Illinois, Urbana-Champaign

C/C++ vs. FORTRAN

```
// C or C++
#pragma acc <directive> <clauses>
{ … }

! Fortran
!$acc <directive> <clauses>
…
!$acc end <directive>
```

© David Kirk/NVIDIA and Wen-mei W. Hwu, 2007-2018
ECE408/CS483/CSE408, ECE 498AL, University of Illinois, Urbana-Champaign

Top 5 Supercomputers (Fall 2022)

Rank	System	Cores	Rmax (PFlop/s)	Rpeak (PFlop/s)	Power (kW)
1	**Frontier** - HPE Cray EX235a, AMD Optimized 3rd Generation EPYC 64C 2GHz, AMD Instinct MI250X, Slingshot-11, HPE DOE/SC/Oak Ridge National Laboratory United States	8,730,112	1,102.00	1,685.65	21,100
2	**Supercomputer Fugaku** - Supercomputer Fugaku, A64FX 48C 2.2GHz, Tofu interconnect D, Fujitsu RIKEN Center for Computational Science Japan	7,630,848	442.01	537.21	29,899
3	**LUMI** - HPE Cray EX235a, AMD Optimized 3rd Generation EPYC 64C 2GHz, AMD Instinct MI250X, Slingshot-11, HPE EuroHPC/CSC Finland	2,220,288	309.10	428.70	6,016
4	**Leonardo** - BullSequana XH2000, Xeon Platinum 8358 32C 2.6GHz, NVIDIA A100 SXM4 40 GB, Quad-rail NVIDIA HDR100 Infiniband, Atos EuroHPC/CINECA Italy	1,463,616	174.70	255.75	5,610
5	**Summit** - IBM Power System AC922, IBM POWER9 22C 3.07GHz, NVIDIA Volta GV100, Dual-rail Mellanox EDR Infiniband, IBM DOE/SC/Oak Ridge National Laboratory United States	2,414,592	148.60	200.79	10,096

ORNL Frontier

9472 AMD CPUs
37,888 AMD GPUs

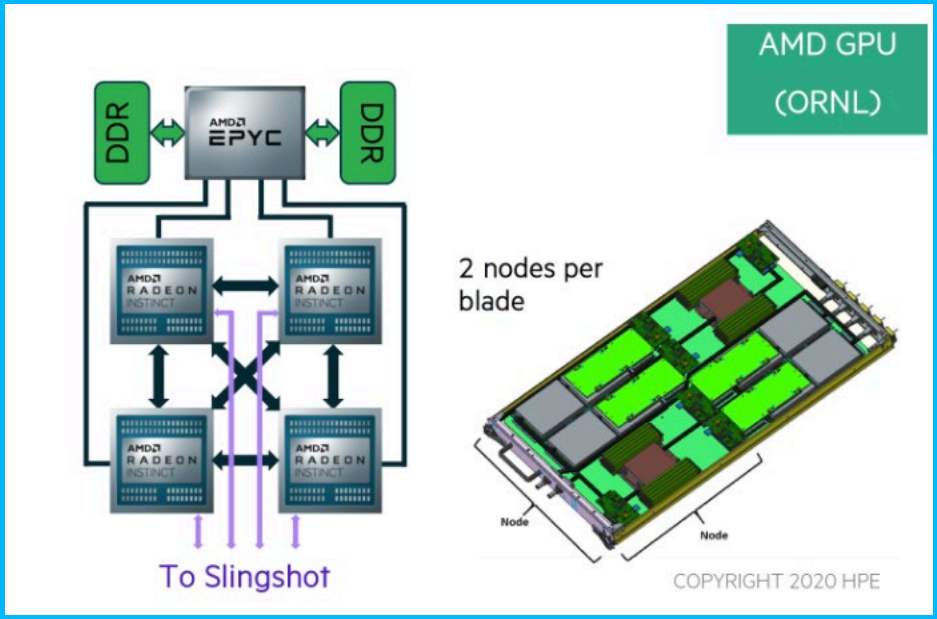

© David Kirk/NVIDIA and Wen-mei W. Hwu, 2007-2018
ECE408/CS483/CSE408, ECE 498AL, University of Illinois, Urbana-Champaign

Blue Waters @ UIUC (2013-2021)

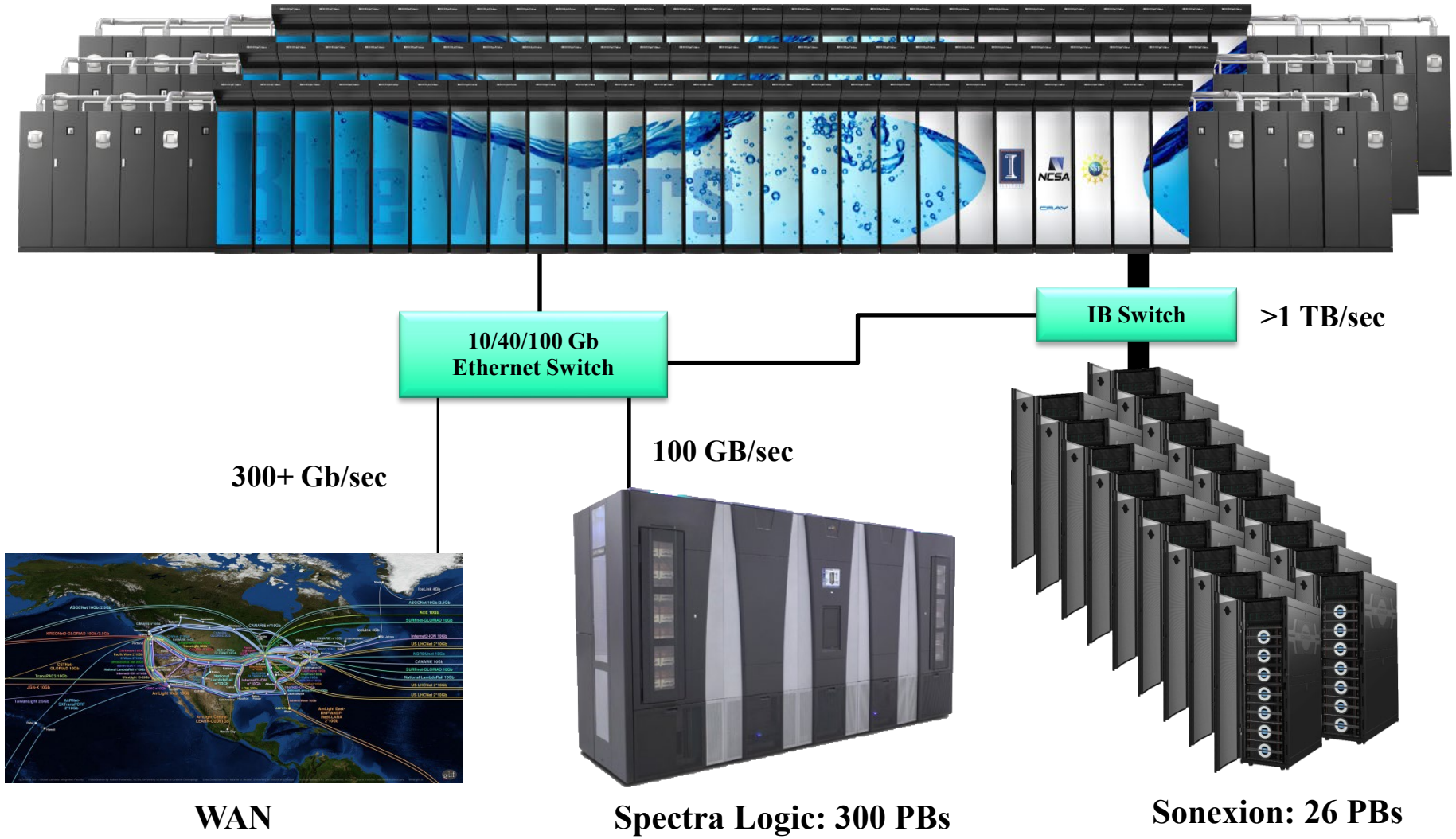

© David Kirk/NVIDIA and Wen-mei W. Hwu, 2007-2018
ECE408/CS483/CSE408, ECE 498AL, University of Illinois, Urbana-Champaign

Cray XK7 Nodes

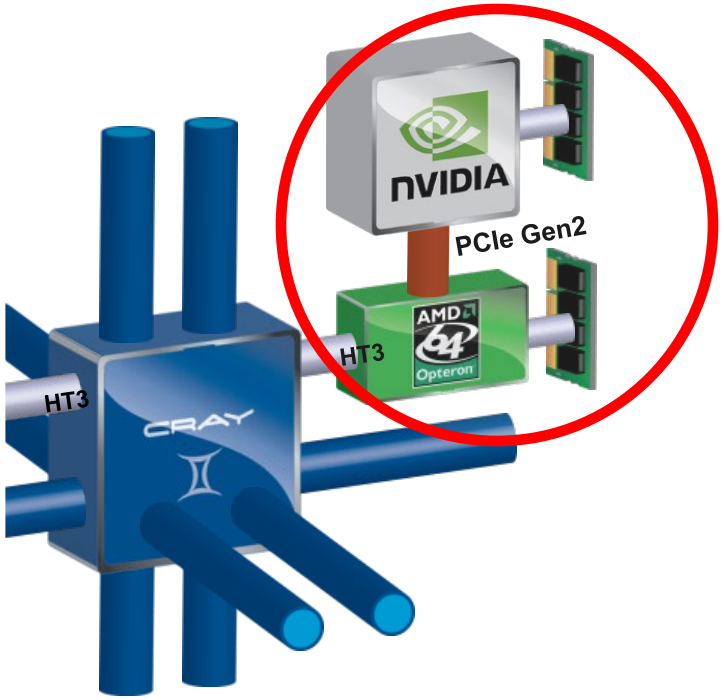

Blue Waters contained 4,224 Cray XK7 compute nodes.

- Dual-socket Node
  - One AMD Interlagos chip
    - 8 core modules, 32 threads
    - 156.5 GFs peak performance
    - 32 GBs memory
      - 51 GB/s bandwidth
  - One NVIDIA Kepler chip
    - 1.3 TFs peak performance
    - 6 GBs GDDR5 memory
      - 250 GB/sec bandwidth
  - Gemini Interconnect
    - Same as XE6 nodes

© David Kirk/NVIDIA and Wen-mei W. Hwu, 2007-2018
ECE408/CS483/CSE408, ECE 498AL, University of Illinois, Urbana-Champaign

Abstract CUDA-based Node

- Each node contains *N* GPUs

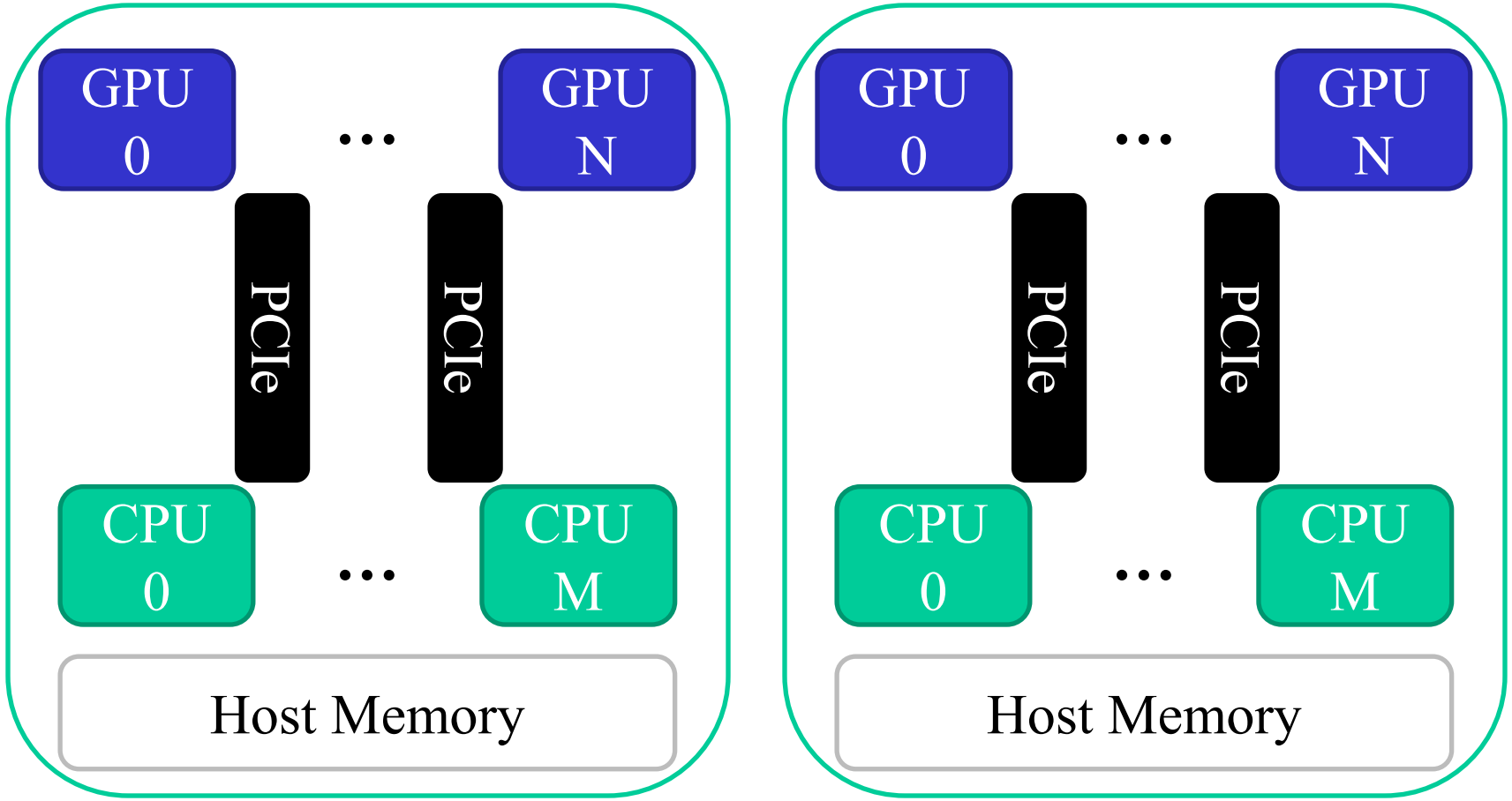

© David Kirk/NVIDIA and Wen-mei W. Hwu, 2007-2018
ECE408/CS483/CSE408, ECE 498AL, University of Illinois, Urbana-Champaign

CUDA Support for Multiple GPUs

- **cudaSetDevice()** sets the current GPU
- Current GPU can be changed while async calls (kernels, memcopies) are running
  - It is also OK to queue up a bunch of async calls to a GPU and then switch to another GPU

```
cudaSetDevice( 0 );
kernel<<>>(...);
cudaMemcpyAsync(...);
cudaSetDevice( 1 );
kernel<<>>(...);
```

© David Kirk/NVIDIA and Wen-mei W. Hwu, 2007-2018
ECE408/CS483/CSE408, ECE 498AL, University of Illinois, Urbana-Champaign

MPI Model

- Many processes distributed in a cluster

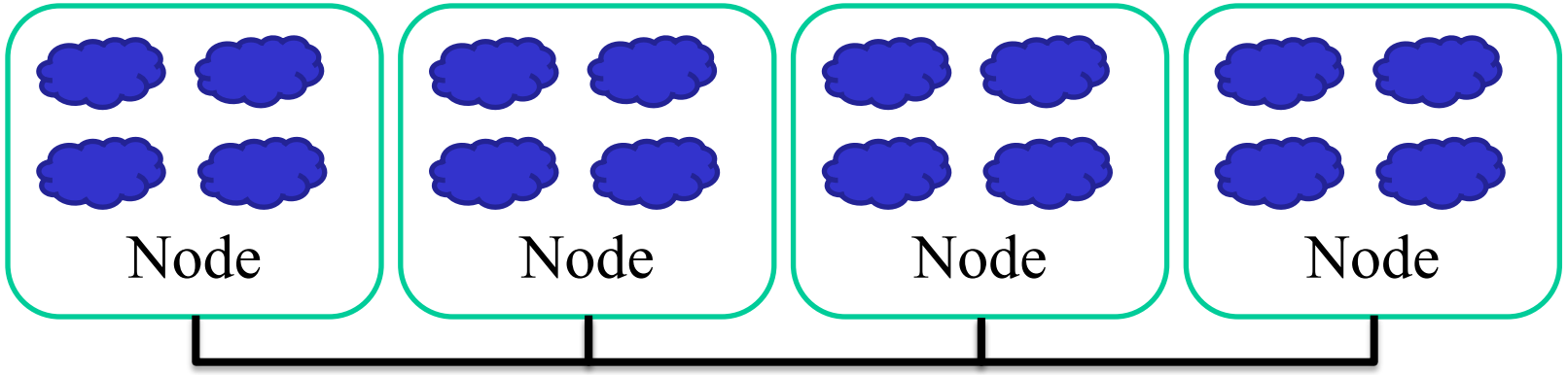

- Each process computes part of the output
- Processes communicate with each other through message passing (not global memory)
- Processes can synchronize through messages

© David Kirk/NVIDIA and Wen-mei W. Hwu, 2007-2018
ECE408/CS483/CSE408, ECE 498AL, University of Illinois, Urbana-Champaign

MPI Initialization, Info

- `User launches an MPI job with X processes by executing in the command shell`
  - `MPIrun –np X`
- `int MPI_Init(int *argc, char ***argv)`
  - Initialize MPI
- `MPI_COMM_WORLD`
  - MPI group formed with all allocated nodes
- `int MPI_Comm_rank(MPI_Comm comm, int *rank)`
  - Rank of the calling process in group of comm
- `int MPI_Comm_size(MPI_Comm comm, int *size)`
  - Number of processes in the group of comm

© David Kirk/NVIDIA and Wen-mei W. Hwu, 2007-2018
ECE408/CS483/CSE408, ECE 498AL, University of Illinois, Urbana-Champaign

Vector Addition: Main Process

```
int main(int argc, char *argv[]) {
    int vector_size = 1024 * 1024 * 1024;
    int pid=-1, np=-1;

    MPI_Init(&argc, &argv);
    MPI_Comm_rank(MPI_COMM_WORLD, &pid);
    MPI_Comm_size(MPI_COMM_WORLD, &np);

    if(np < 3) {
        if(0 == pid) printf("Nedded 3 or more processes.\n");
        MPI_Abort( MPI_COMM_WORLD, 1 ); return 1;
    }
    if(pid < np - 1)
        compute_node(vector_size / (np - 1));
    else
        data_server(vector_size);

    MPI_Finalize();
    return 0;
}
```


© David Kirk/NVIDIA and Wen-mei W. Hwu, 2007-2018
ECE408/CS483/CSE408, ECE 498AL, University of Illinois, Urbana-Champaign

MPI Sending Data

- `int MPI_Send(void *buf, int count, MPI_Datatype datatype, int dest, int tag, MPI_Comm comm)`
  - buf: Starting address of send buffer
  - count: Number of elements in send buffer (nonnegative integer)
  - datatype: Datatype of each send buffer element
  - dest: Rank of destination (integer)
  - tag: Message tag (integer)
  - comm: Communicator (handle)

© David Kirk/NVIDIA and Wen-mei W. Hwu, 2007-2018
ECE408/CS483/CSE408, ECE 498AL, University of Illinois, Urbana-Champaign

MPI Sending Data

- `int MPI_Send(void *buf, int count, MPI_Datatype datatype, int dest, int tag, MPI_Comm comm)`
  - Buf: Initial address of send buffer
  - Count: Number of elements in send buffer (nonnegative integer)
  - Datatype: Datatype of each send buffer element
  - Dest: Rank of destination (integer)
  - Tag: Message tag (integer)
  - Comm: Communicator (handle)

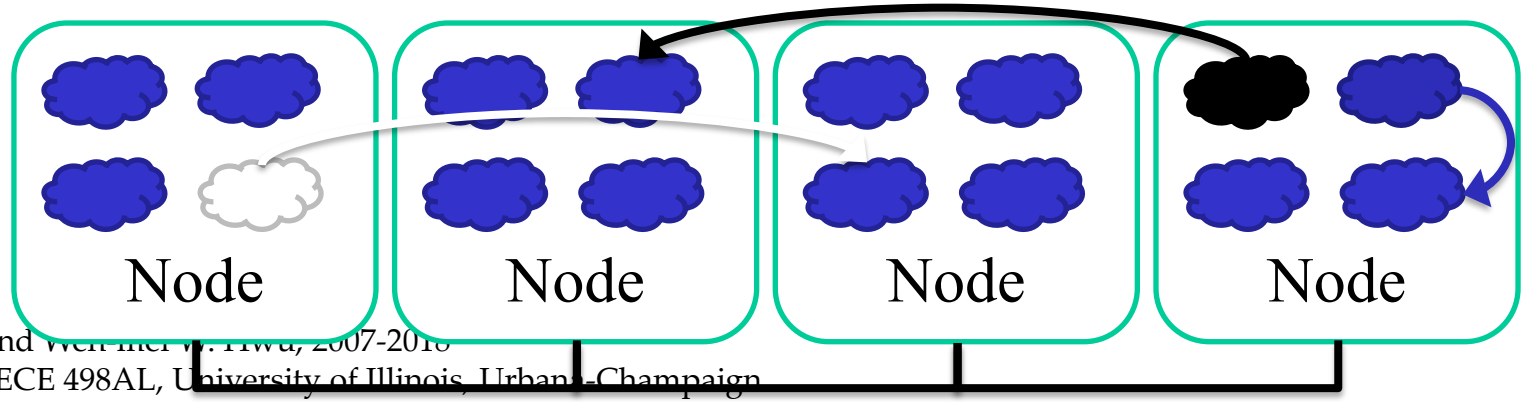

© David Kirk/NVIDIA and Wen-mei W. Hwu, 2007-2018
ECE408/CS483/CSE408, ECE 498AL, University of Illinois, Urbana-Champaign

MPI Receiving Data

- `int MPI_Recv(void *buf, int count, MPI_Datatype datatype, int source, int tag, MPI_Comm comm, MPI_Status *status)`
  - buf: Starting address of receive buffer
  - count: Maximum number of elements in receive buffer (non-negative integer)
  - datatype: Datatype of each receive buffer element
  - source: Rank of source (integer)
  - tag: Message tag (integer)
  - comm: Communicator (handle)
  - status: Status object

© David Kirk/NVIDIA and Wen-mei W. Hwu, 2007-2018
ECE408/CS483/CSE408, ECE 498AL, University of Illinois, Urbana-Champaign

MPI Receiving Data

- `int MPI_Recv(void *buf, int count, MPI_Datatype datatype, int source, int tag, MPI_Comm comm, MPI_Status *status)`
  - Buf: Initial address of receive buffer
  - Count: Maximum number of elements in receive buffer (non-negative integer)
  - Datatype: Datatype of each receive buffer element
  - Source: Rank of source (integer)
  - Tag: Message tag (integer)
  - Comm: Communicator (handle)
  - Status: Status object (Status)

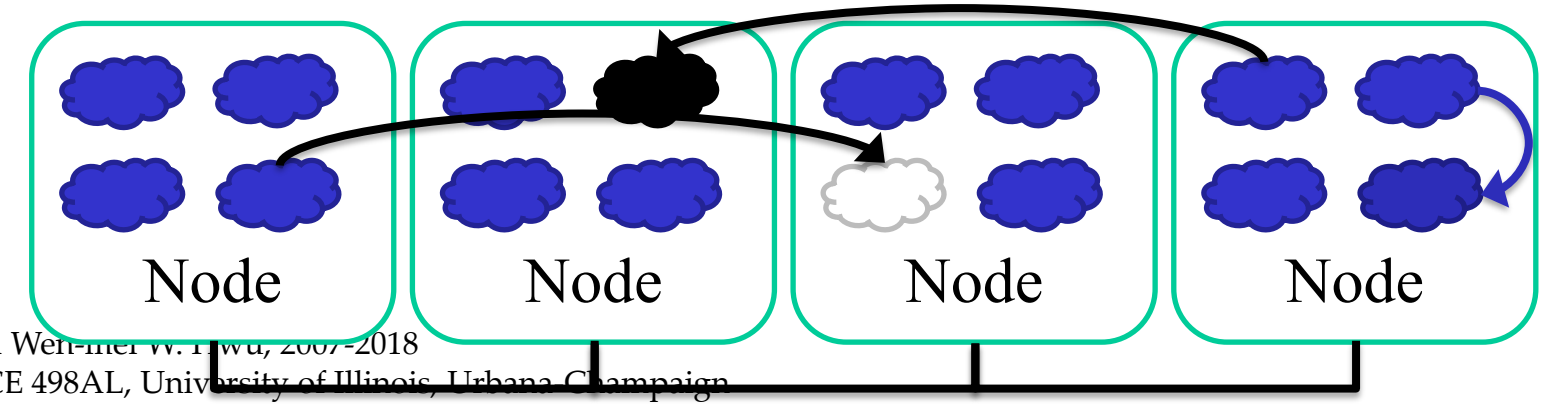

© David Kirk/NVIDIA and Wen-mei W. Hwu, 2007-2018
ECE408/CS483/CSE408, ECE 498AL, University of Illinois, Urbana-Champaign

Vector Addition: Server Process (I)

```
void data_server(unsigned int vector_size) {
    int np, num_nodes = np – 1, first_node = 0, last_node = np - 2;
    unsigned int num_bytes  = vector_size * sizeof(float);
    float *input_a = 0, *input_b = 0, *output = 0;

    /* Set MPI Communication Size */
    MPI_Comm_size(MPI_COMM_WORLD, &np);

    /* Allocate input data */
    input_a = (float *)malloc(num_bytes);
    input_b = (float *)malloc(num_bytes);
    output = (float *)malloc(num_bytes);
    if(input_a == NULL || input_b == NULL || output == NULL) {
        printf("Server couldn't allocate memory\n");
        MPI_Abort( MPI_COMM_WORLD, 1 );
    }
    /* Initialize input data */
    random_data(input_a, vector_size , 1, 10);
    random_data(input_b, vector_size ,
```


© David Kirk/NVIDIA and Wen-mei W. Hwu, 2007-2018
ECE408/CS483/CSE408, ECE 498AL, University of Illinois, Urbana-Champaign

Vector Addition: Server Process (II)

```
/* Send data to compute nodes */
float *ptr_a = input_a;
float *ptr_b = input_b;

for (int process = 1; process < last_node; process++) {
    MPI_Send(ptr_a, vector_size / num_nodes, MPI_FLOAT,
            process, DATA_DISTRIBUTE, MPI_COMM_WORLD);
    ptr_a += vector_size / num_nodes;

    MPI_Send(ptr_b, vector_size / num_nodes, MPI_FLOAT,
            process, DATA_DISTRIBUTE, MPI_COMM_WORLD);
    ptr_b += vector_size / num_nodes;
}
```

© David Kirk/NVIDIA and Wen-mei W. Hwu, 2007-2018
ECE408/CS483/CSE408, ECE 498AL, University of Illinois, Urbana-Champaign

Vector Addition: Server Process (III)

```
    /* Wait for compute to complete*/
    MPI_Barrier(MPI_COMM_WORLD);

    /* Collect output data */
    MPI_Status status;
    for (int process = 0; process < num_nodes; process++) {
        MPI_Recv(output + process * num_points / num_nodes,
            num_points / num_comp_nodes, MPI_REAL, process,
            DATA_COLLECT, MPI_COMM_WORLD, &status );
    }

    /* Store output data */
    store_output(output, dimx, dimy, dimz);

    /* Release resources */
    free(input);
    free(output);
}
```

© David Kirk/NVIDIA and Wen-mei W. Hwu, 2007-2018
ECE408/CS483/CSE408, ECE 498AL, University of Illinois, Urbana-Champaign

Vector Addition: Compute Process (I)

```
void compute_node(unsigned int vector_size ) {
    int np;
    unsigned int num_bytes = vector_size * sizeof(float);
    float *input_a, *input_b, *output;
    MPI_Status status;

    MPI_Comm_size(MPI_COMM_WORLD, &np);
    int server_process = np - 1;

    /* Alloc host memory */
    input_a = (float *)malloc(num_bytes);
    input_b = (float *)malloc(num_bytes);
    output = (float *)malloc(num_bytes);

    /* Get the input data from server process */
    MPI_Recv(input_a, vector_size, MPI_FLOAT, server_process,
            DATA_DISTRIBUTE, MPI_COMM_WORLD, &status);
    MPI_Recv(input_b, vector_size, MPI_FLOAT, server_process,
            DATA_DISTRIBUTE, MPI_COMM_WORLD, &status);
```

© David Kirk/NVIDIA and Wen-mei W. Hwu, 2007-2018
ECE408/CS483/CSE408, ECE 498AL, University of Illinois, Urbana-Champaign

Vector Addition: Compute Process (II)

```
    /* Compute the partial vector addition */
    for (int i = 0; i < vector_size; ++i) {
        output[i] = input_a[i] + input_b[i];
    }

    /* Or, can offload to GPU here */
    /* cudaMalloc(), cudaMemcpy(), kernel launch, etc. */

    MPI_Barrier(MPI_COMM_WORLD);

    /* Send the output */
    MPI_Send(output, vector_size, MPI_FLOAT,
            server_process, DATA_COLLECT, MPI_COMM_WORLD);

    /* Release memory */
    free(input_a);
    free(input_b);
    free(output);
}
```

© David Kirk/NVIDIA and Wen-mei W. Hwu, 2007-2018
ECE408/CS483/CSE408, ECE 498AL, University of Illinois, Urbana-Champaign

ANY MORE QUESTIONS?
READ CHAPTER 15

Also see https://developer.nvidia.com/intro-to-openacc-course-2016

© David Kirk/NVIDIA and Wen-mei W. Hwu, 2007-2018
ECE408/CS483/CSE408, ECE 498AL, University of Illinois, Urbana-Champaign